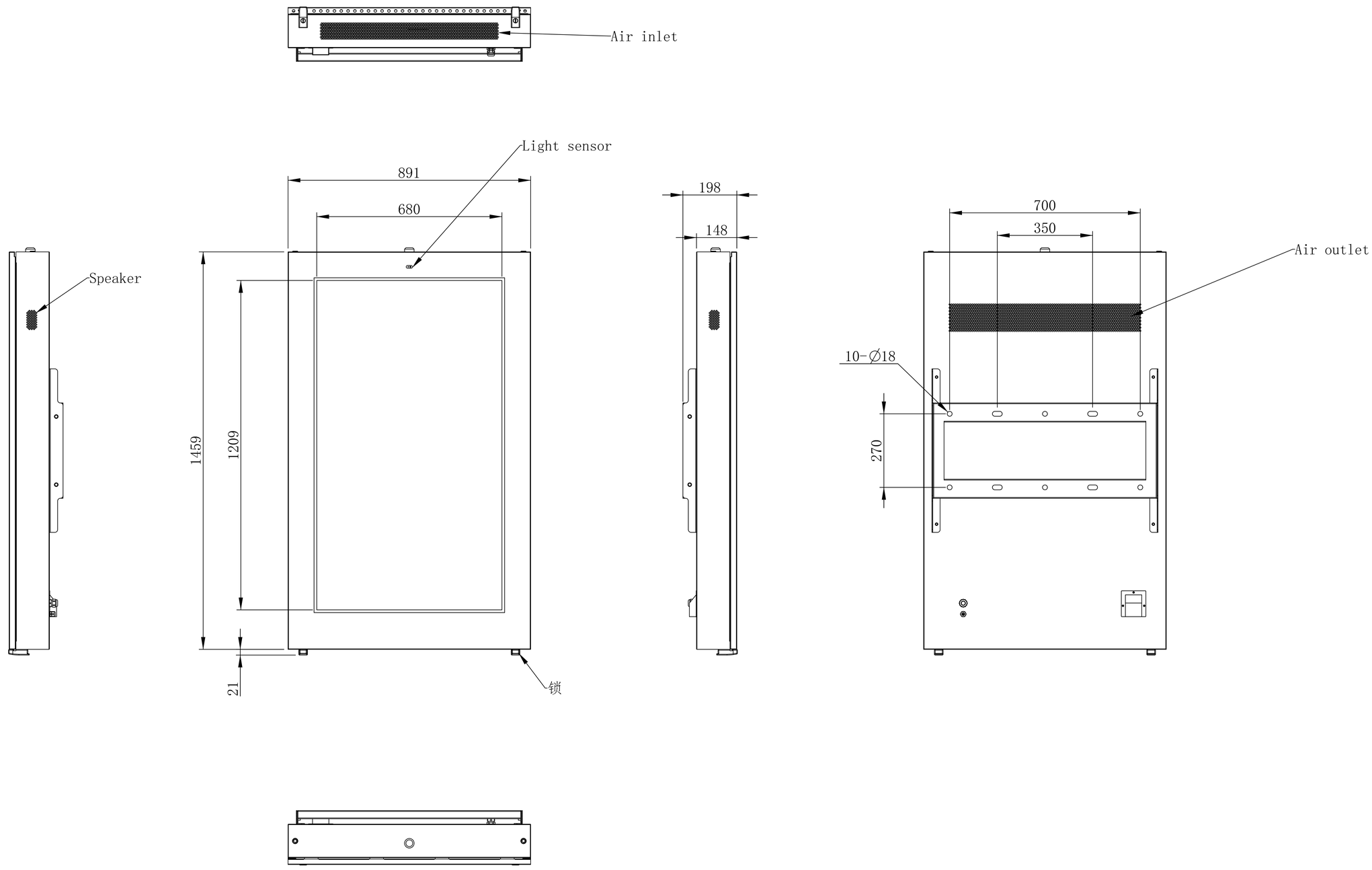
Air inlet
Light sensor
891
680
198
148
700
350
Air outlet
Speaker
10-∅18
1459
1209
270
21
锁